401

MPL-401-013

Plunger mechanism
(P-B962-3058M7MD)

Plunger mechanism
(P-B962-3058M7MD)
MPL-401-013

401

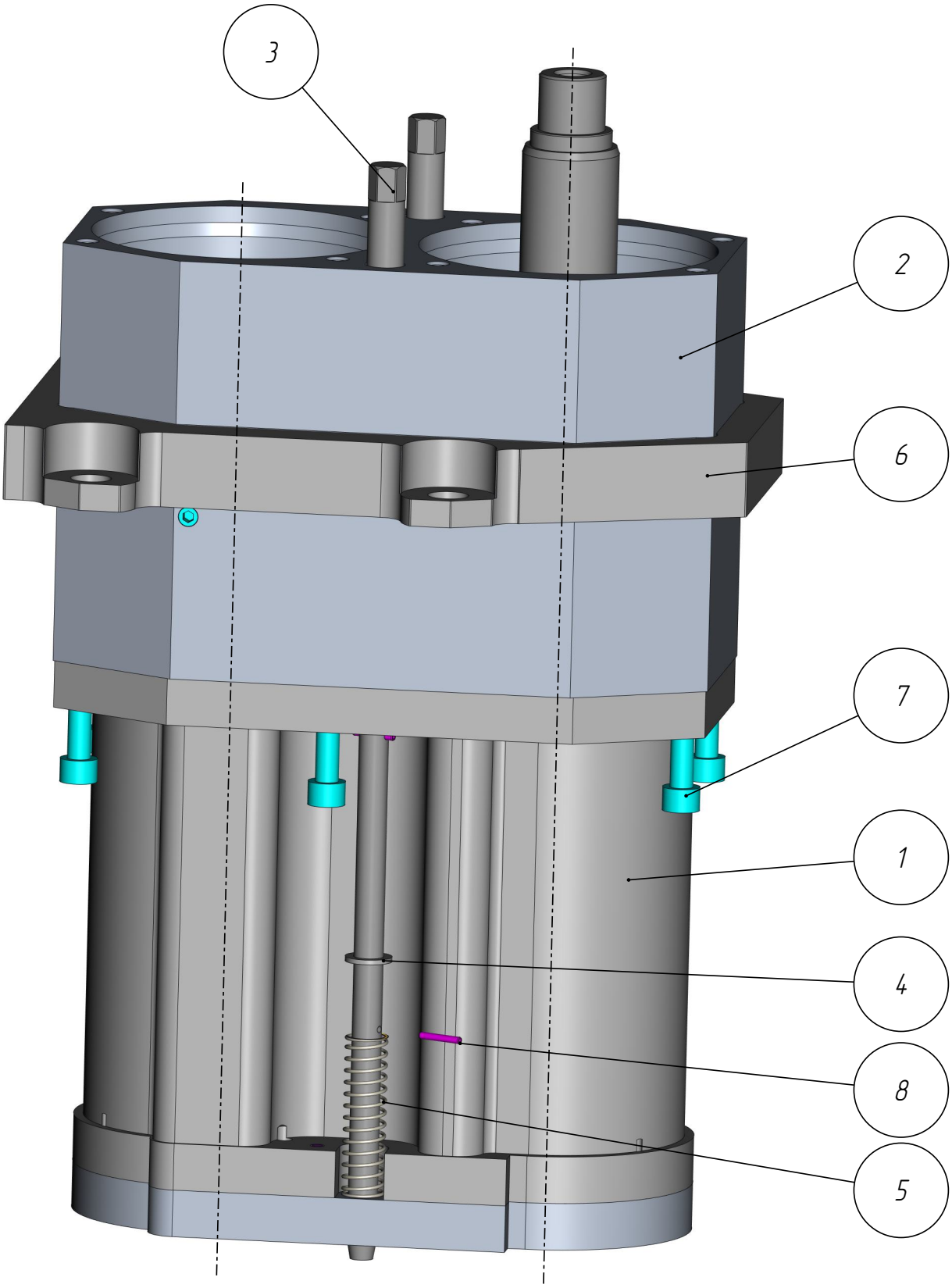

MPL-401-013

Plunger mechanism
(P-B962-3058M7MD)
MPL-401-013

401

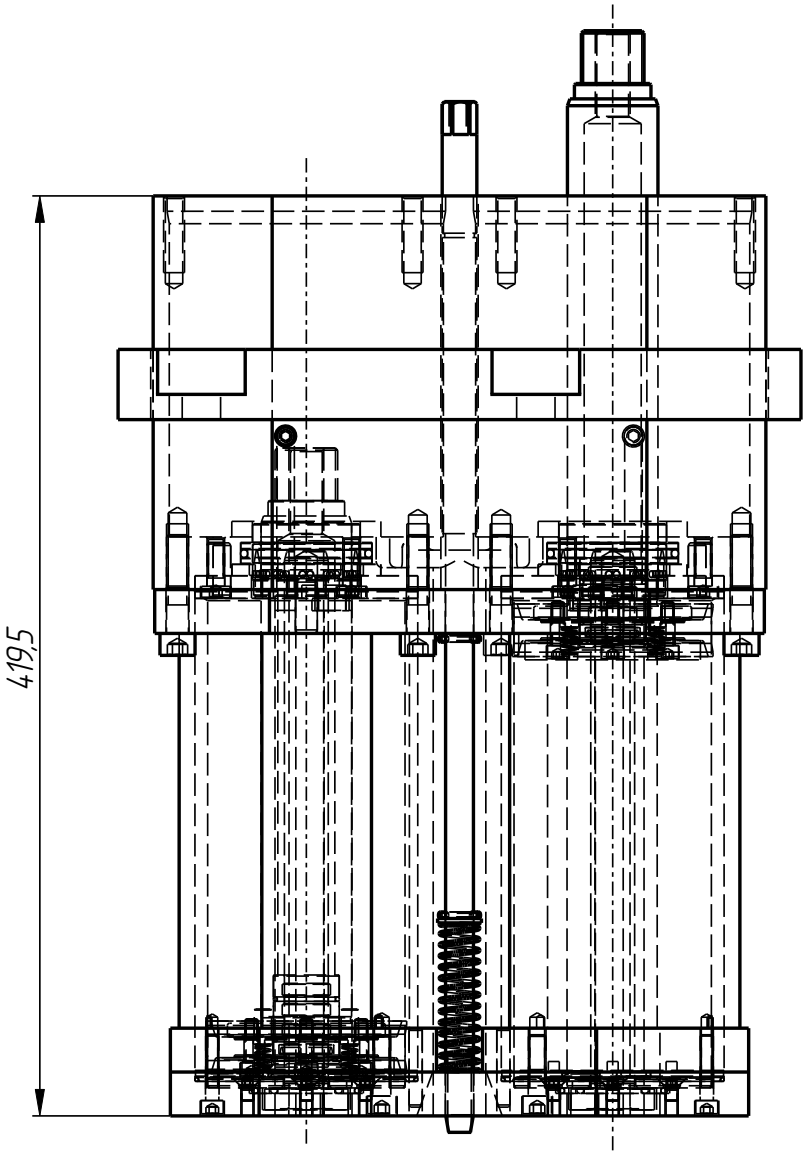

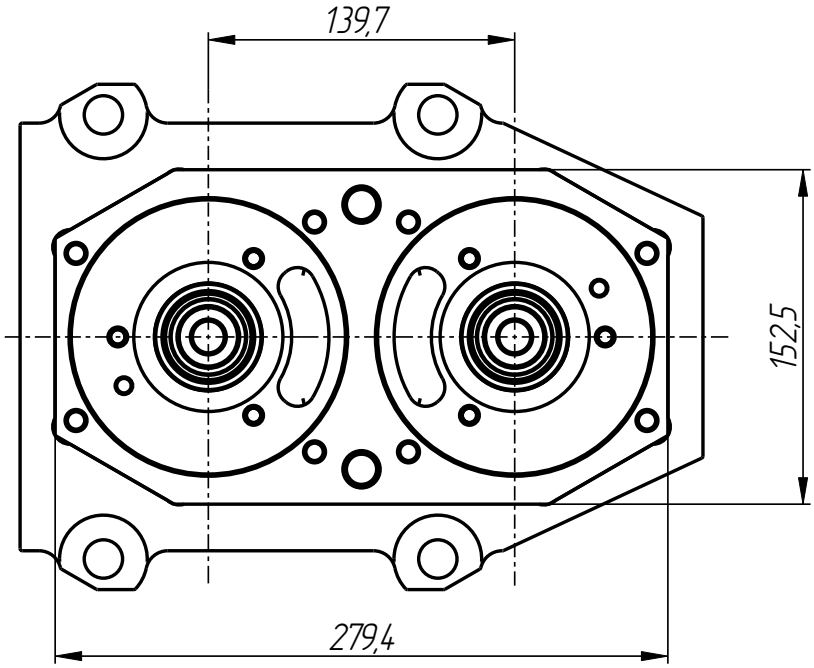

MPL-401-013

MPL-401-013

Plunger mechanism
(P-B962-3058M7MD)

Specification

№ pos.	Code	Name	Qty
		Сборочные единицы:	
1	MPL-401-013-001	Lower block	1
2	MPL-401-013-002	Upper block	1
		Parts:	
3	MPL-401-002-003	Screw	2
4	MPL-401-002-004	Washer	2
5	MPL-401-002-005	Spring	2
6	MPL-401-013-003	Frame	1
		Standard parts:	
7	Screw M10x45 DIN 912		6
8	Spring pin Φ 3x20 DIN 1481		4

Plunger mechanism
(P-B962-3058M7MD)
MPL-401-013

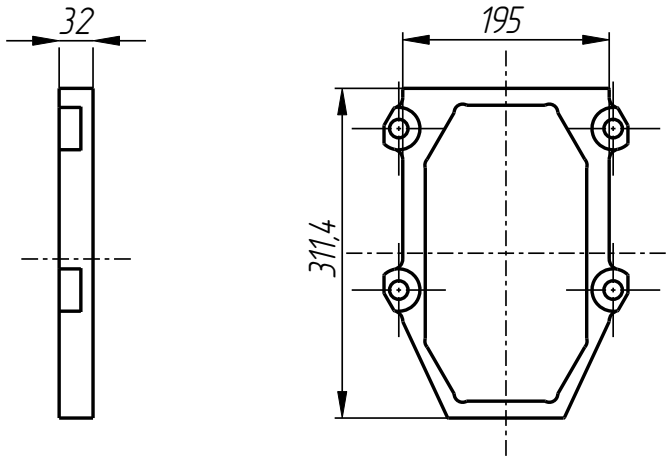

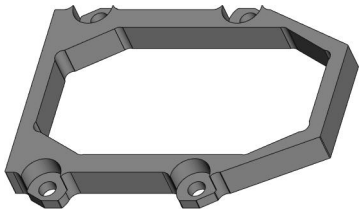

Frame
MPL-401-013-003

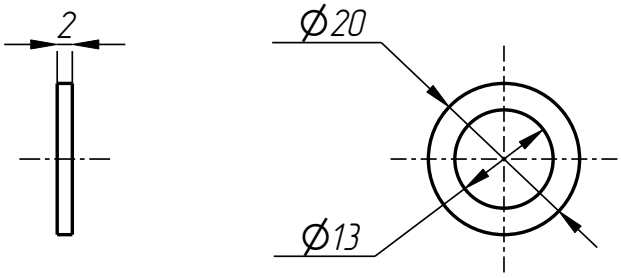

Washer
MPL-401-002-004

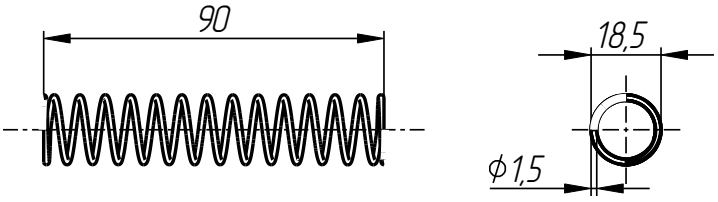

Spring
MPL-401-002-005

Plunger mechanism
(P-B962-3058M7MD)
MPL-401-013

401

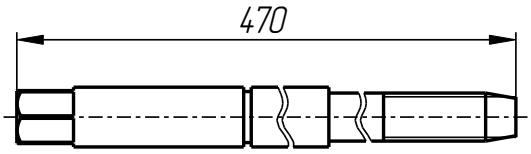

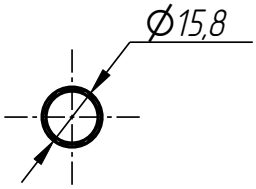

Bushing
MPL-401-013-002-003

MPL-401-013

Upper block
MPL-401-013-002

401

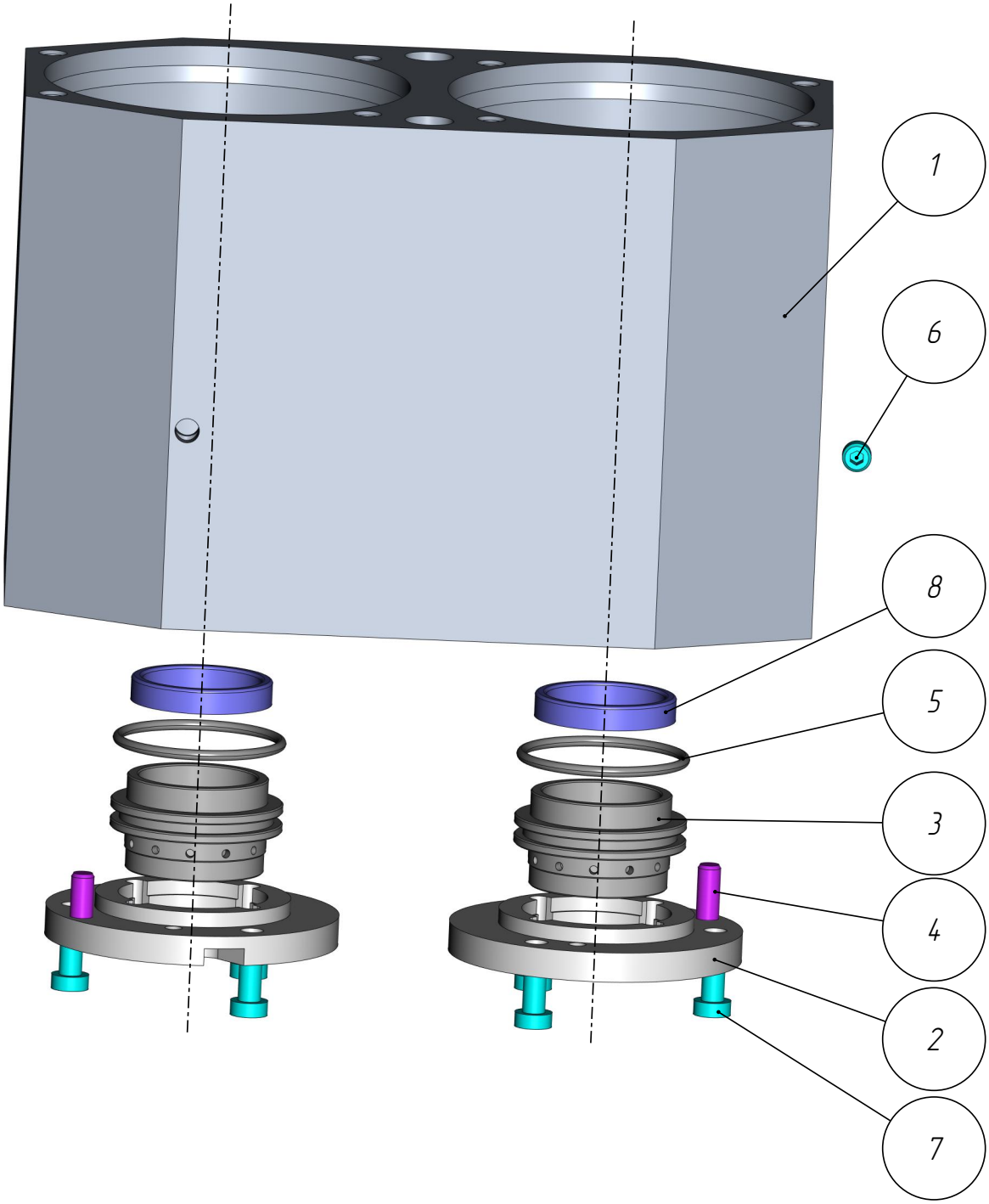

MPL-401-013-002

MPL-401-013-002

Upper block

Specification

Nº pos.	Code	Name	Qty
		Parts:	
1	MPL-401-013-002-001	Main body	1
2	MPL-401-013-002-002	Flange	2
3	MPL-401-013-002-003	Bushing	2
		Standard parts:	
4	Pin GOST 3128-70		2
5	Ring 5158.23.67		2
6	Screw M10x8 GOST 11074-93		2
7	Screw M8x20 DIN 7984		6
8	Sealing 41.27498		2

Upper block
MPL-401-013-002

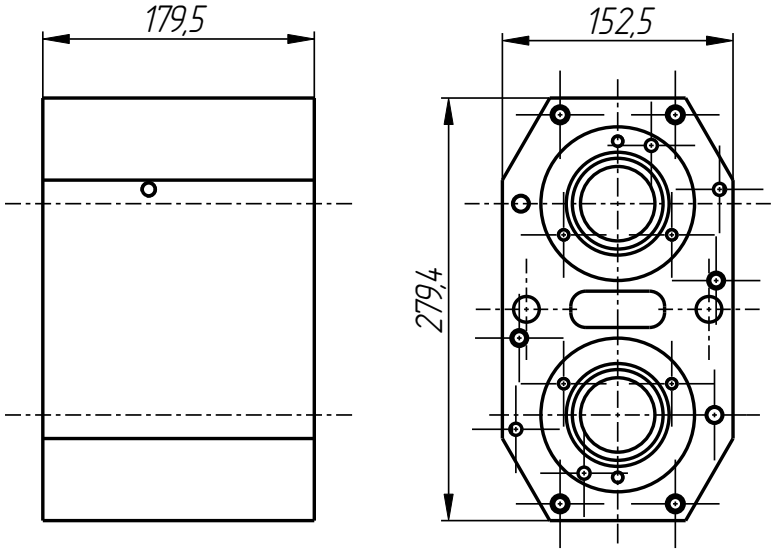

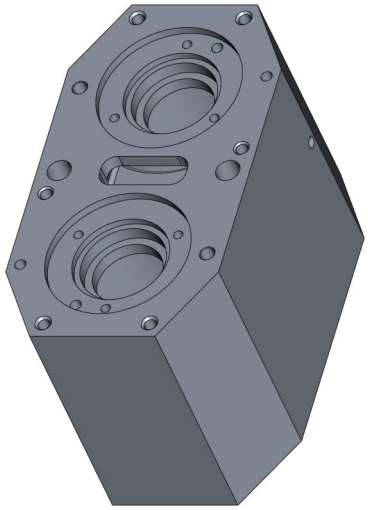

Main body
MPL-401-013-002-001

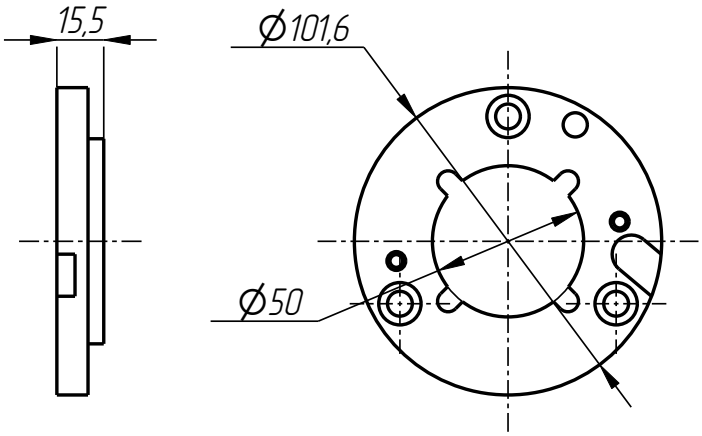

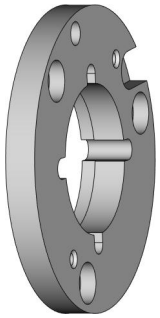

Flange
MPL-401-013-002-002

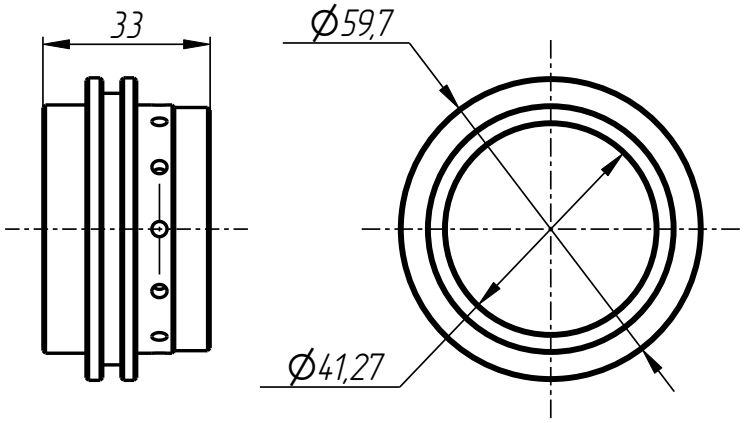

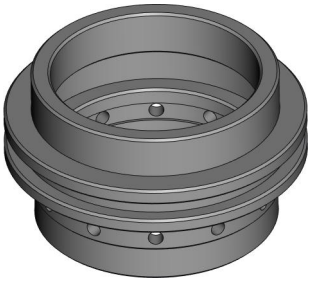

Screw
MPL-401-002-003

Lower block
MPL-401-013-001

401

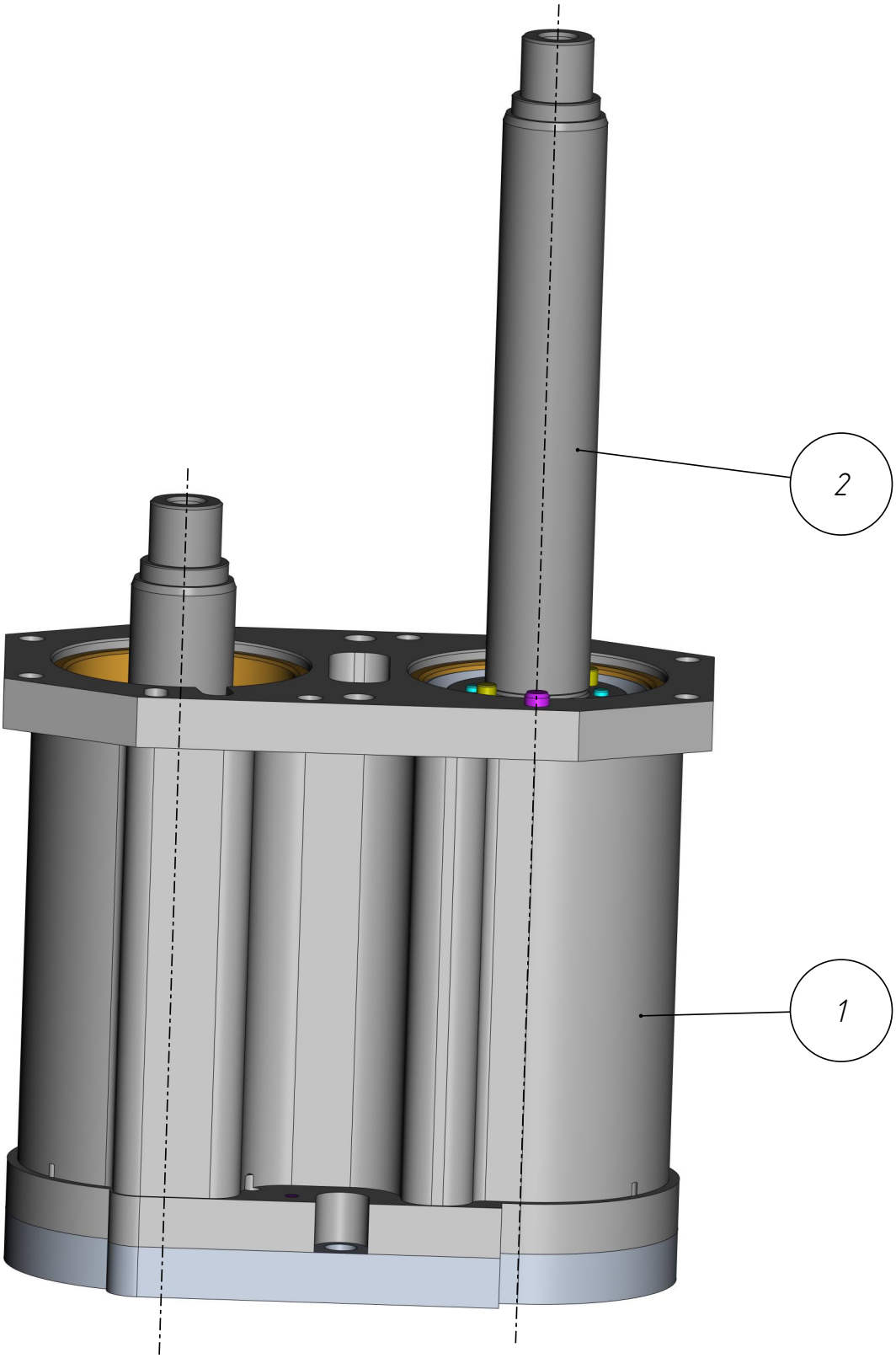

MPL-401-013-001

MPL-401-013-001

Lower block

Specification

№ pos.	Code	Name	Qty
		Сборочные единицы:	
1	MPL-401-013-001-001	Main body assembly	1
2	MPL-401-013-001-002	Stock assembly	2

Stock assembly
MPL-401-013-001-002

401

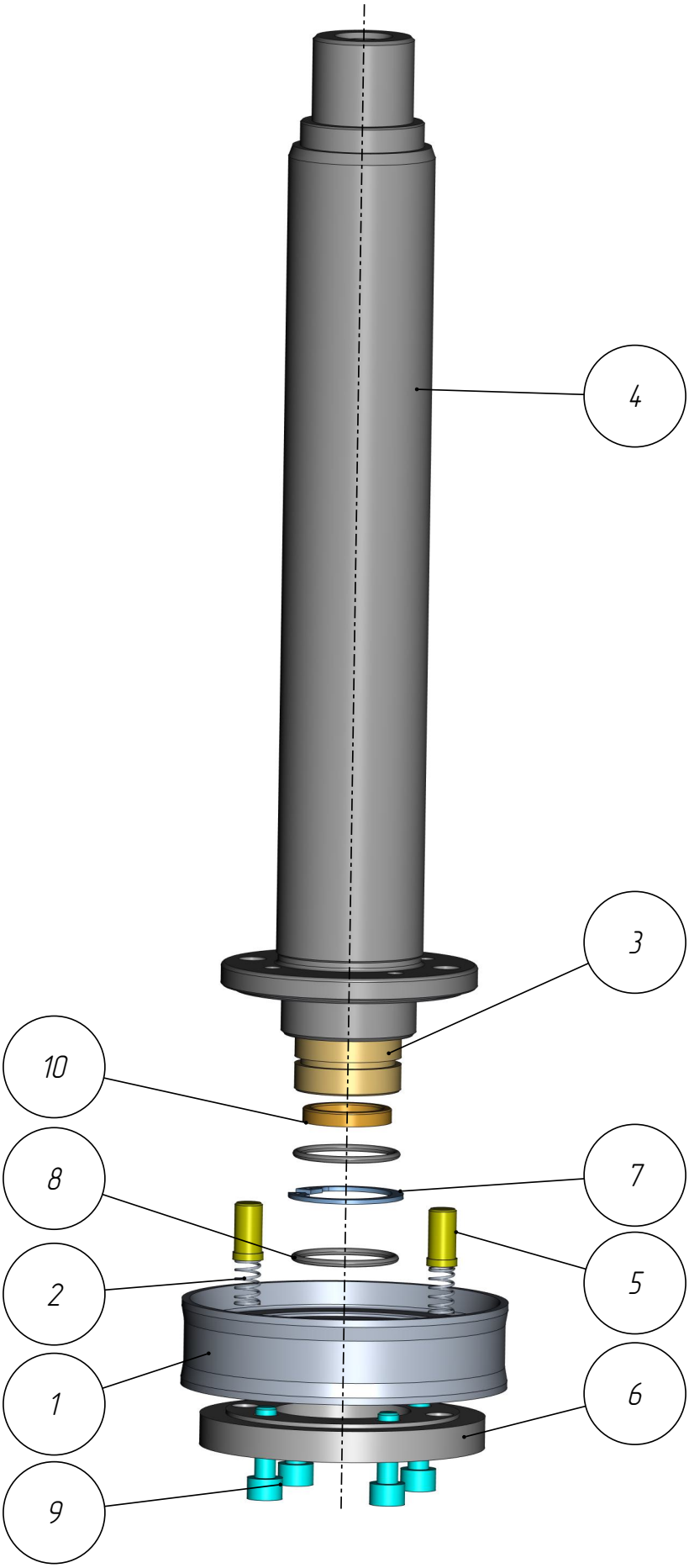

MPL-401-013-001-002

MPL-401-013-001-002

Stock assembly

Specification

Nº pos.	Code	Name	Qty
		Parts:	
1	MPL-401-002-001-004-002	Piston	1
2	MPL-401-002-001-004-004	Spring	2
3	MPL-401-002-001-004-006	Bushing	1
4	MPL-401-013-001-002-001	Stock	1
5	MPL-401-013-001-002-002	Plug	2
6	MPL-401-013-001-002-003	Flange	1
		Standard parts:	
7	Locking Ring Φ 30 GOST 13943-86		1
8	Ring 24.528.31.97		2
9	Screw M6x20 DIN 912		4
10	Sealing 20254		1

Stock assembly
MPL-401-013-001-002

401

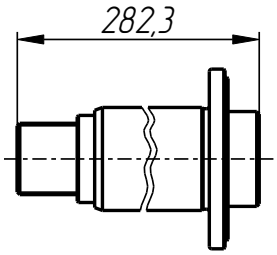

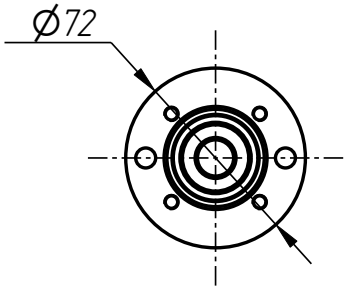

Stock
MPL-401-013-001-002-001

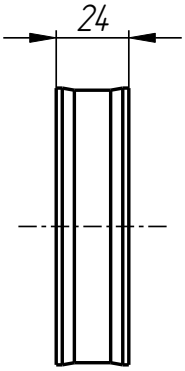

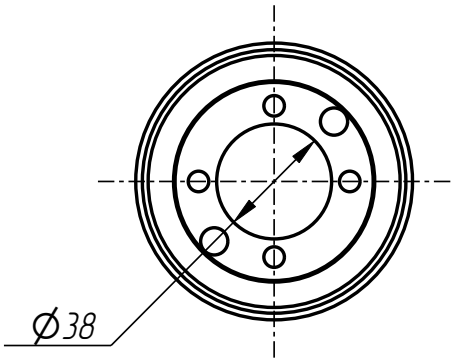

Piston
MPL-401-002-001-004-002

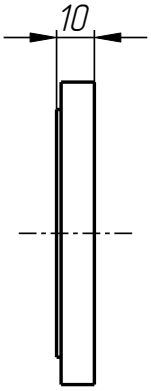

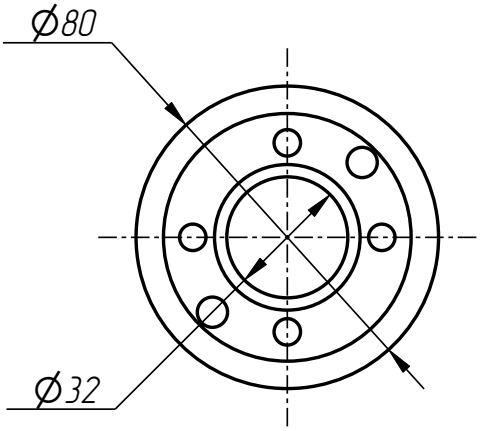

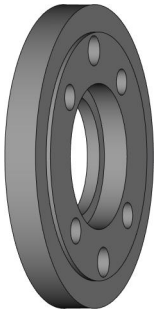

Flange
MPL-401-013-001-002-003

MPL-401-013-001-002

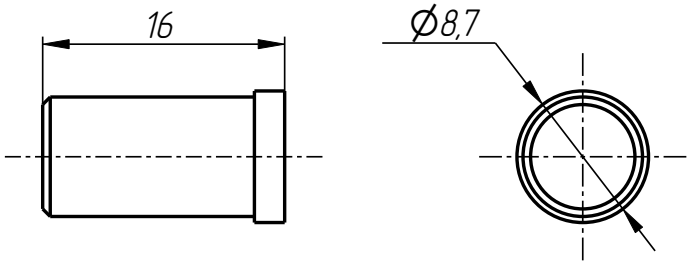

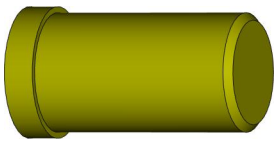

Plug
MPL-401-013-001-002-002

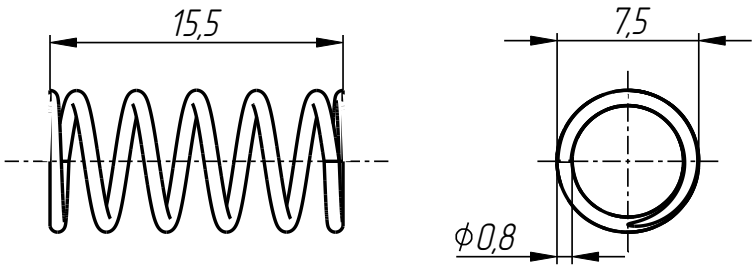

Spring
MPL-401-002-001-004-004

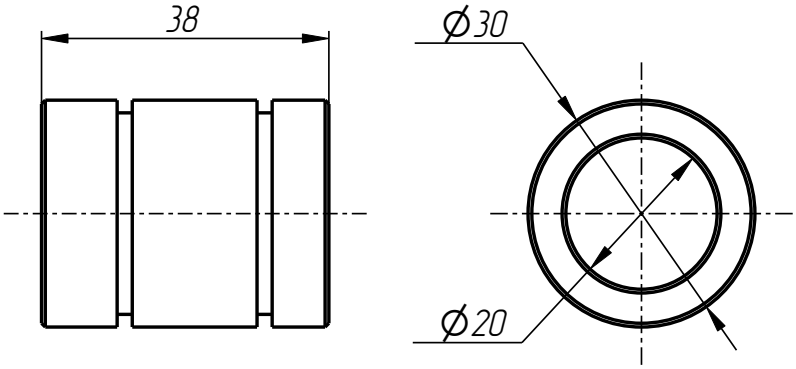

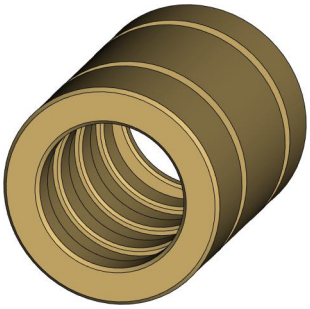

Bushing
MPL-401-002-001-004-006

Main body assembly
MPL-401-013-001-001

401

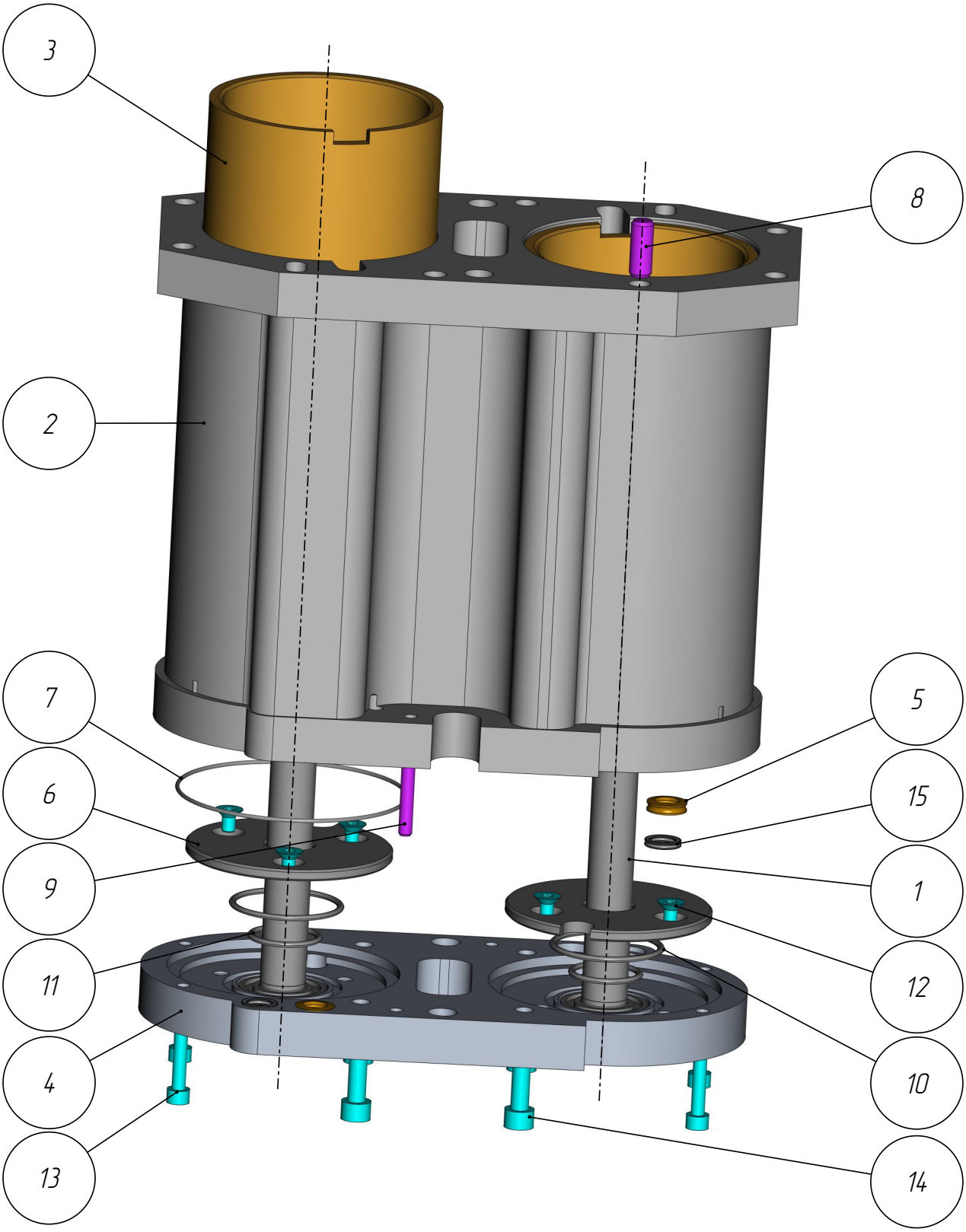

MPL-401-013-001-001

MPL-401-013-001-001

Main body assembly

Specification

№ pos.	Code	Name	Qty
		Сборочные единицы:	
		Parts:	
1	MPL-401-005-002-001	Stock	2
2	MPL-401-013-001-001-001	Main body	1
3	MPL-401-013-001-001-002	Bushing	2
4	MPL-401-013-001-001-003	Main body	1
5	MPL-401-013-001-001-004	Sealing ring	2
6	MPL-401-013-001-001-005	Washing	2
		Standard parts:	
7	0-98.051.78		2
8	Pin 10Гx25 GOST 3128-70		2
9	Pin 6Гx36 GOST 3128-70		2
10	Ring 445030		2
11	Ring 26.532.537		2
12	Screw M6x10 DIN 7991		6
13	Screw M6x30 DIN 912		4
14	Screw M8x28 DIN 912		4
15	X-10.772.62		2

Main body assembly
MPL-401-013-001-001

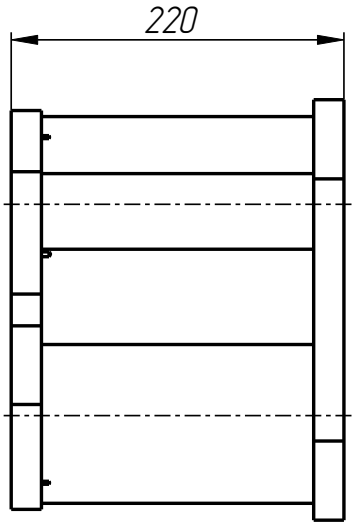

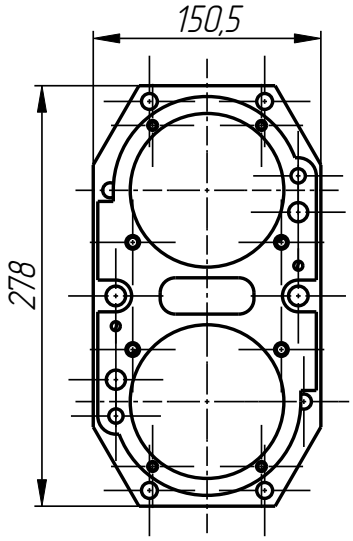

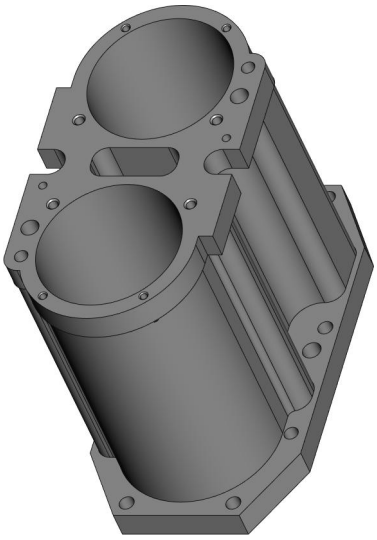

Main body
MPL-401-013-001-001-001

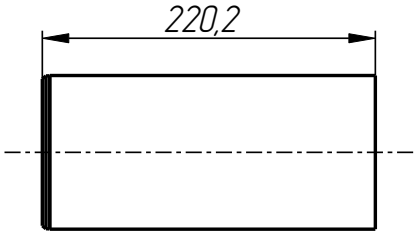

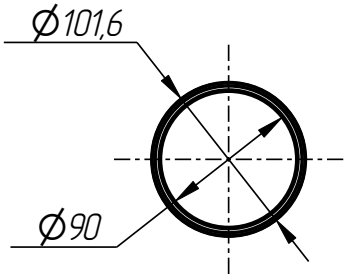

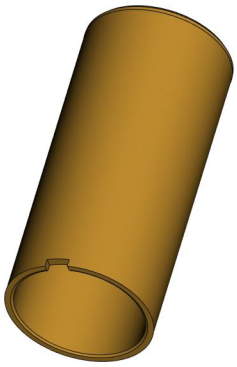

Bushing
MPL-401-013-001-001-002

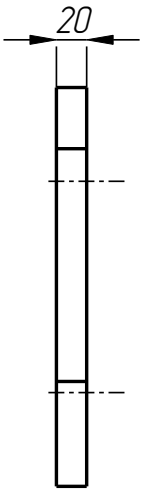

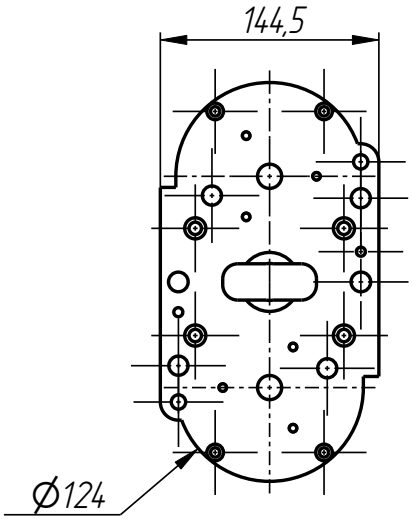

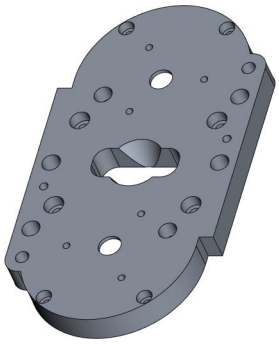

Main body
MPL-401-013-001-001-003

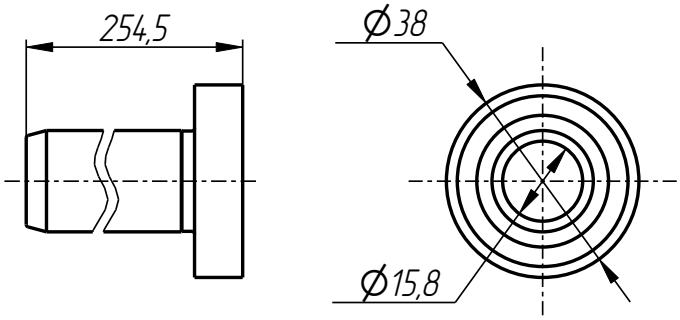

Stock
MPL-401-005-002-001

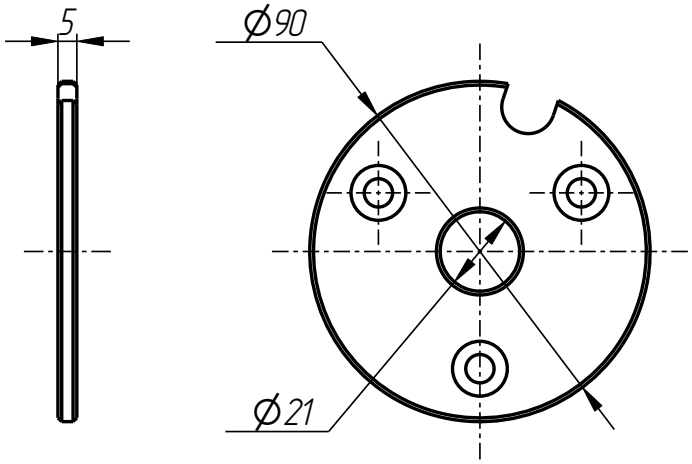

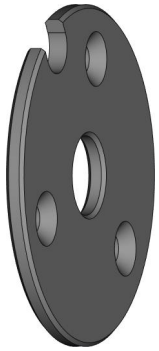

Washing
MPL-401-013-001-001-005

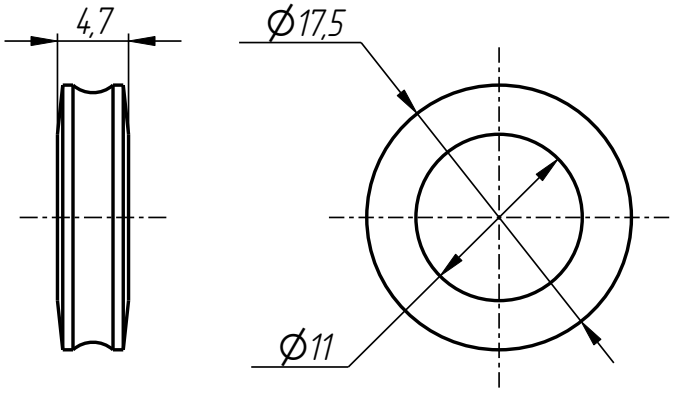

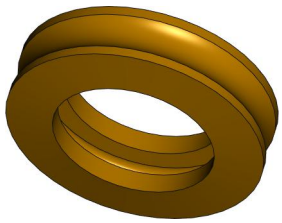

Sealing ring
MPL-401-013-001-001-004